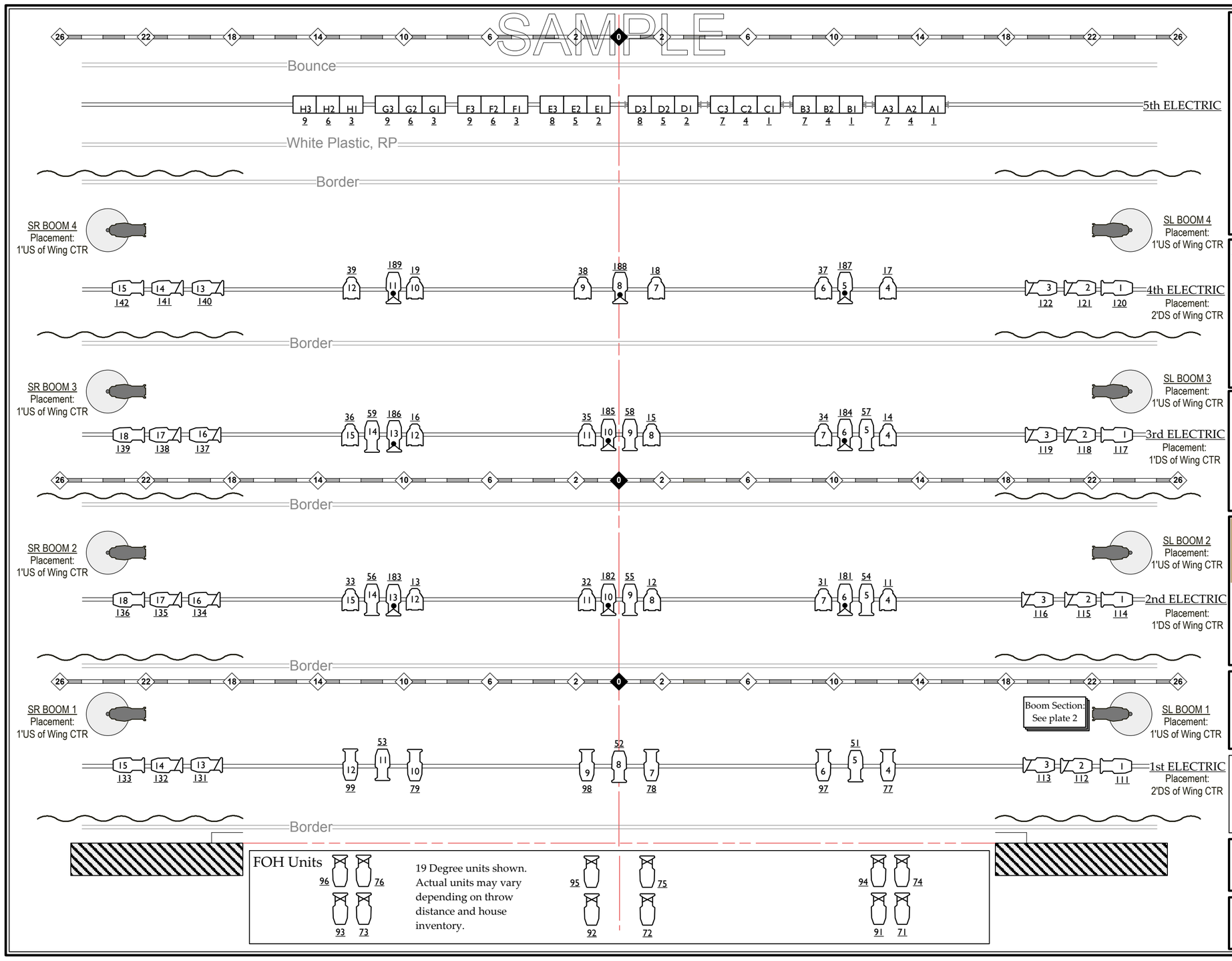

LEGEND

- ETC Source Four 36 degree, 575watt
- ETC Source Four 26 degree, 575watt
- ETC Source Four 19 degree, 575watt
- ETC Source Four 50 degree, 575watt
- ETC Source Four PAR (wide), 575watt
- 3 Light Far Cyc
- Plan View Lighting Boom

KEY

187 CHANNEL #
23 INSTRUMENT #
GOBO INDICATOR

NOTES

1.This Light plot is designed to convey the basic lighting concepts of HB2s Lighting needs. It is not tailored to your space and some decisions will have to be made by designer on site.
2. All fixtures hung on 1'-6"centers unless otherwise noted.
3.Cool front light system units onstage (94-102) may be re-assigned to high side gobo system if necessary. Patch will remain as indicated on plot

CONTACT

Brian Walker
Production Manager----------713.535.3257

Nathan Haworth
Technical Coordinator----------832.567.4029

Michelle Elliot
Stage Manager----------803.767.5914

HOUSTON BALLET
Ben Stevenson Academy

HB Academy
Touring Rep Plot

Rep Design by Brian Walker

THIS DRAWING REPRESENTS VISUAL CONCEPTS AND CONSTRUCTION SUGGESTIONS ONLY.

PLATE DETAILS:	SCALE:
PLATE1: Overhead light plot	1/4" = 1'-0"
PLATE2: Booms/Section	DRAWN BY:
PLATE3:	NPH

DATE:	PLATE:	REVISION:
9-6-11	1 OF: 2	G

601 Preston St.
Houston, TX 77002
(713) 535-6300
www.houstonballet.org

Houston Ballet
Production Department
(713) 535-3261
bwalker@houstonballet.org

Note:
Wings are minimum 7'-6" wide from leg to leg. Electrics and booms are placed in reference to the centerline of the wing. See plate 1 for placement dimensions. Border and electric trim TBD by designer on site.

Note:
The #6 electric should be positioned US/DS depending on individual theatre bounce/cyc configuration. Final placement TBD on site by designer.

Note: FOH
The twelve FOH front light units light onstage wings 1&2. Units should cover stage with three across. If rep FOH rig exists, Designer will assign units on site. If not, spacing indicated on plate one should be used.

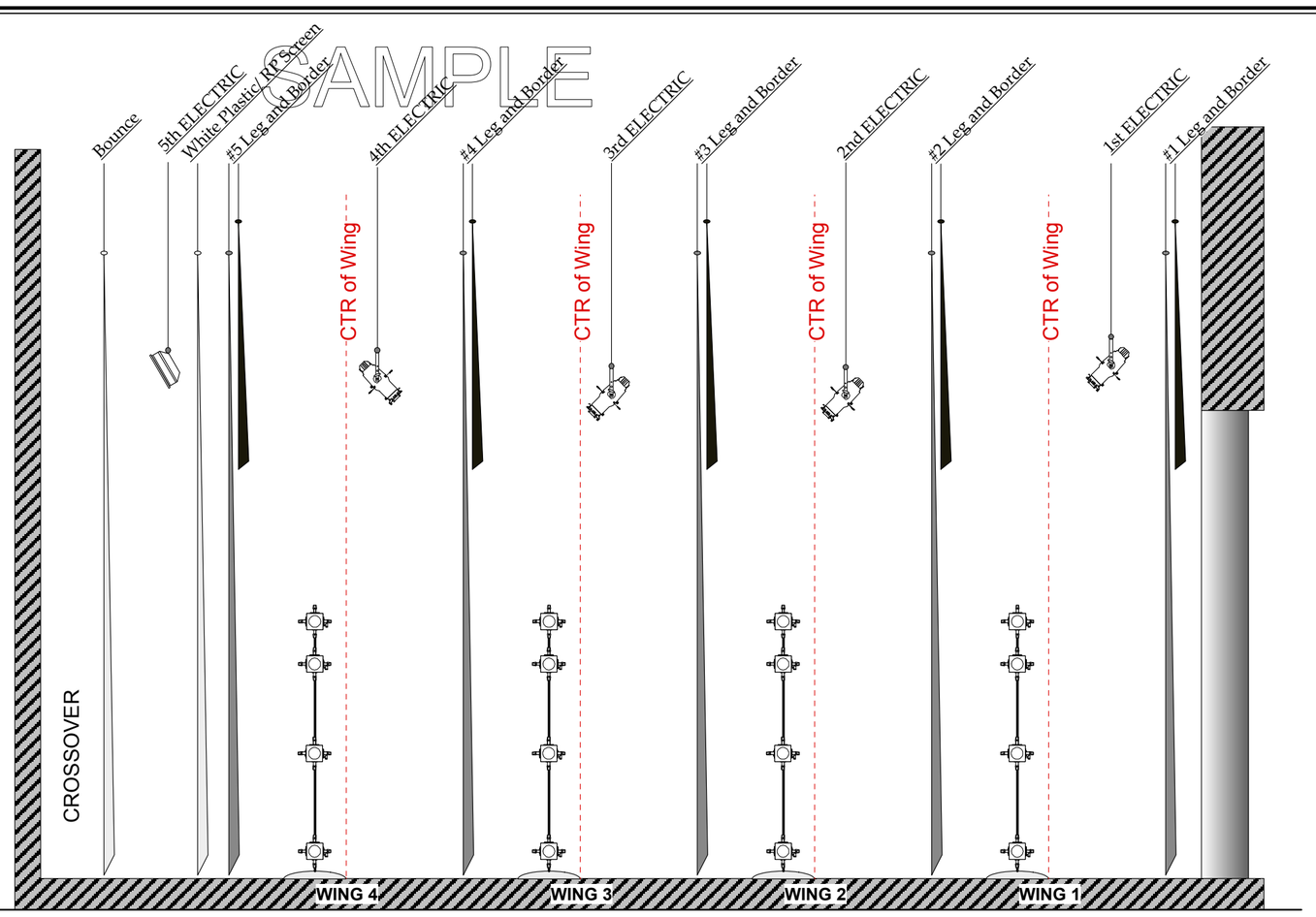

SECTION

Dimensions are Typical for all Booms. Measurments are from lowest possible position on boom to center of fixture lens.

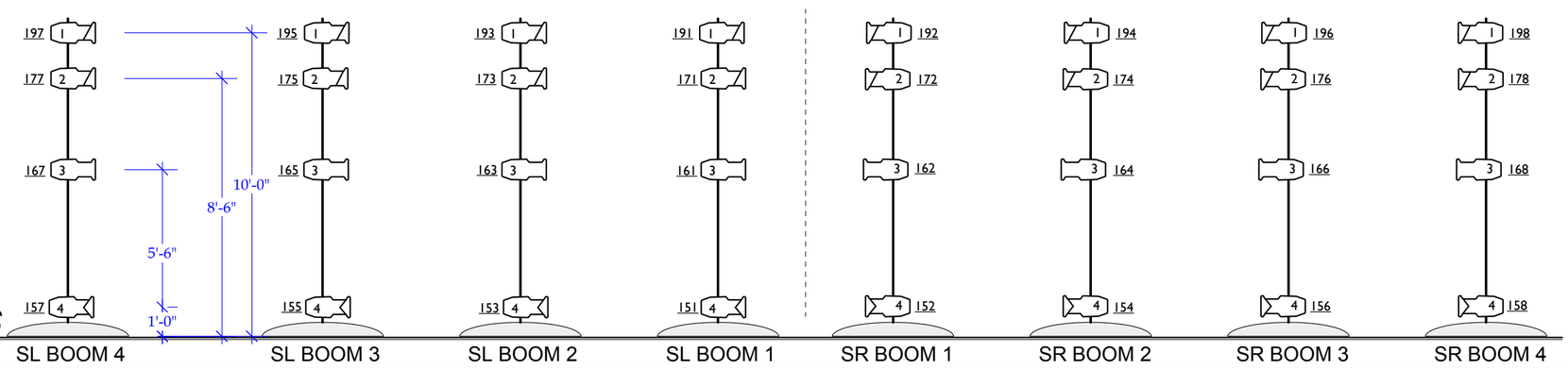

BOOMS

LEGEND

- ETC Source Four 50 degree, 575watt
- ETC Source Four 36 degree, 575watt
- ETC Source Four 26 degree, 575watt

KEY

187 CHANNEL #
23 INSTRUMENT #
GOBO INDICATOR

NOTES

1.This Light plot is designed to convey basic lighting concepts of HB2s Lighting needs. It is not tailored to your space and many decisions will have to be made by designer on site.

2. All fixtures hung on 1'-6"centers unless otherwise noted.

CONTACT

Brian Walker
Production Manager----------713.535.3257

HOUSTON BALLET
Ben Stevenson Academy

HB Academy
Touring Rep Plot

Rep Design by Brian Walker

THIS DRAWING REPRESENTS VISUAL CONCEPTS AND CONSTRUCTION SUGGESTIONS ONLY.

PLATE DETAILS:	SCALE:
PLATE1: Overhead light plot	1/4" = 1'-0"
PLATE2: Booms/Section	DRAWN BY:
PLATE3:	NPH

DATE:	PLATE:	REVISION:
9-6-11	2 OF: 2	G

601 Preston St.
Houston, TX 77002
(713) 535-6300
www.houstonballet.org

Houston Ballet
Production Department
(713) 535-3261
bwalker@houstonballet.org